Smart Register
For
Disabled Workers
Using
Machine Learning & Computer Vision

By :
Cristian Simoni
Brandon Samaroo
Daniel Samaniego
Michael Sarpong
Camilo Rodriguez

The Team

Cristian Simoni - Computer engineering

- **Role:** Team leader/ Software lead
- **Interest:** Cyber Security & Machine learning
- **Hobbies:** Programming and Microcontrollers

Camilo Rodriguez - Computer engineering

- **Role:** Hardware engineer
- **Interest:** Computer vision & Machine learning
- **Hobbies:** Microcontrollers & Embedded systems

Michel Sarpong - Computer engineering

- **Role:** Software engineer
- **Interest:** Cyber security & Machine learning
- **Hobbies:** Programming & Microcontrollers

Brandon Samaroo - Electrical engineering

- **Role:** Hardware engineer
- **Interest:** Embedded systems & Software engineering
- **Hobbies:** Circuit analysis & Microcontrollers

Daniel Samaniego - Electrical engineering

- **Role:** Hardware engineer
- **Interest:** Circuit analysis & Machine learning
- **Hobbies:** Electronics & Signals and Systems

Background:

Upon meeting with Sebastian, it was brought to our attention that the Bronx Site would be opening a cafeteria soon. There are many mentally disabled workers on that site that specifically have trouble counting at the register. So he requested that we build something that would help make their jobs easier. As a result, we came up with the idea of a Smart Register. What we are undertaking is quite an original concept as there are little to no smart cash registers for disabled cashiers. However, there are quite a few POS (Point of Sale) smart cash registers which are utilized in restaurants and other retail establishments. An example of this is the Square POS Register from Square. The advantages of a system like this are the very detailed user interface and database of items/store inventory.

The software is very polished and advanced. The disadvantages are the lack of support for the physical currency and the lack of machine learning and computer vision to scan bills and provide help in transactions that would assist disabled people in a much more prominent manner. In popular grocery & drug stores (Shoprite, Walmart, Target, CVS, and Walgreens self-checkout machines are being used to make purchasing items swift and easy. Further advancements in cash registers include having your receipt emailed to the customer or having a touchpad to purchase an item. In the modern day, there are still improvements to the modern cash registers.

Statement Of The Problem:

For our project, we are looking into disabled workers, particularly cashiers at a small cafe/shop where we plan on assisting said workers with our smart register design just as Sebastian described. We plan on using a system to scan currency with a camera and then process the image so that the system will recognize the currency and then upload it to a touchscreen panel which will be connected to an application that will compute the change they need to give. We are addressing this issue to deal with the challenges workers face when dealing with currency while also keeping it simplistic shown in Figure 2. Thus, our team needed to put ourselves into the perspective of disabled individuals and implement a feature that could aid them in their workplace.

Furthermore, we feel as if this is an issue in our society that needs to be addressed, some disabled workers just want to feel normal and not be judged. If our product can help the workers at the Bronx site in any sort of capacity then our goal is met. Hopefully, we can expand it to a larger scale and help other individuals in a similar situation.

Figure 2: Functional Decomposition Level 0 Diagram.

Level 0

Module	Smart Register
Inputs	Power: 12-24V DC Voltage Data: Images
Outputs	LCD Screen
Functionality	The image should be processed and displayed the image on the screen letting the user know the currency has been scanned

Level 1

Module	Microcontroller processor
Inputs	Power: DC Voltage Data: Images
Outputs	Paper Currency Recognition system
Functionality	The Microcontroller processor will run the currency recognition system software and send the data to the optical engine

Level 2

Module	Sensor Camara
Inputs	Power: DC Voltage Input: Visible light
Outputs	Scanned image
Functionality	The visible light will allow the camera to read or scan the currency and send that data to the machine learning algorithm

.

Functional Decomposition:

Here we present the Level 0 of our system, which will describe the input and output of our system. It will be powered by a DC voltage of 12-24V and it will take input of scanned image data which will be compiled and sent to the microcontroller for the software to read/analyze and send that info to the display screen for the user to see. This is shown in Figure 3 shown below.

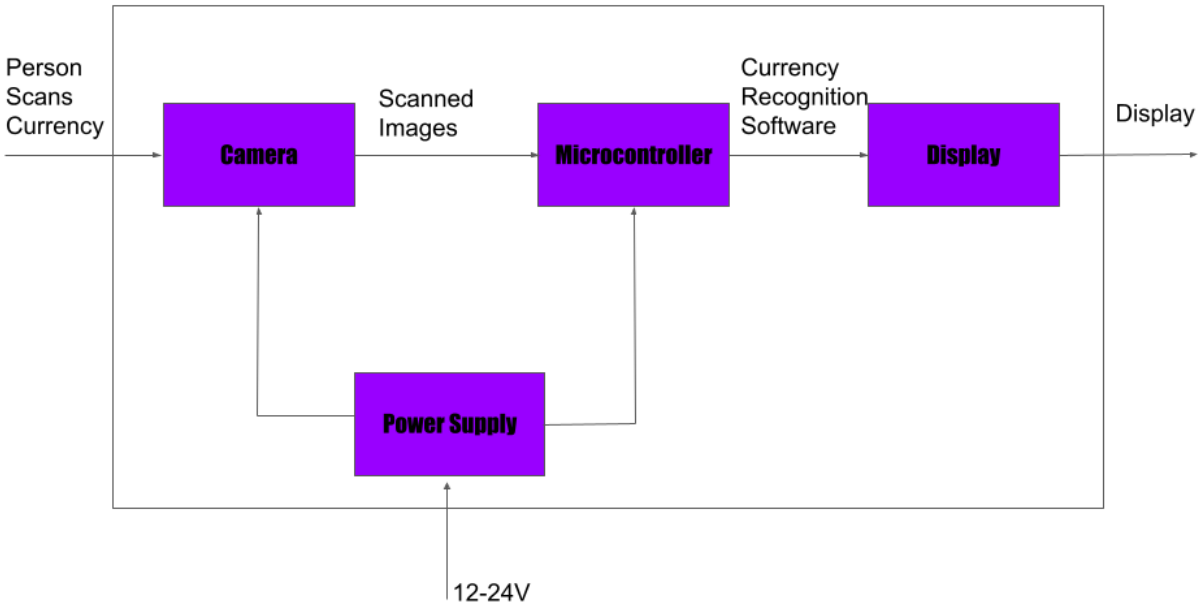

Figure 3: Functional decomposition System Overview Diagram

Behavioral Model Use Case Diagram:

For our Use case diagram, there will be three main components, Currency scan, Display output, and the image database. The user will interact with the currency recognition software. This is where the image scanner will capture the currency being used and will proceed to send that data to the microcontroller. Then the display output will showcase the currency or bill that was scanned on the display screen. The microcontroller will also have a database of bills we want to recognize. A visualization is shown below in Figure 4.

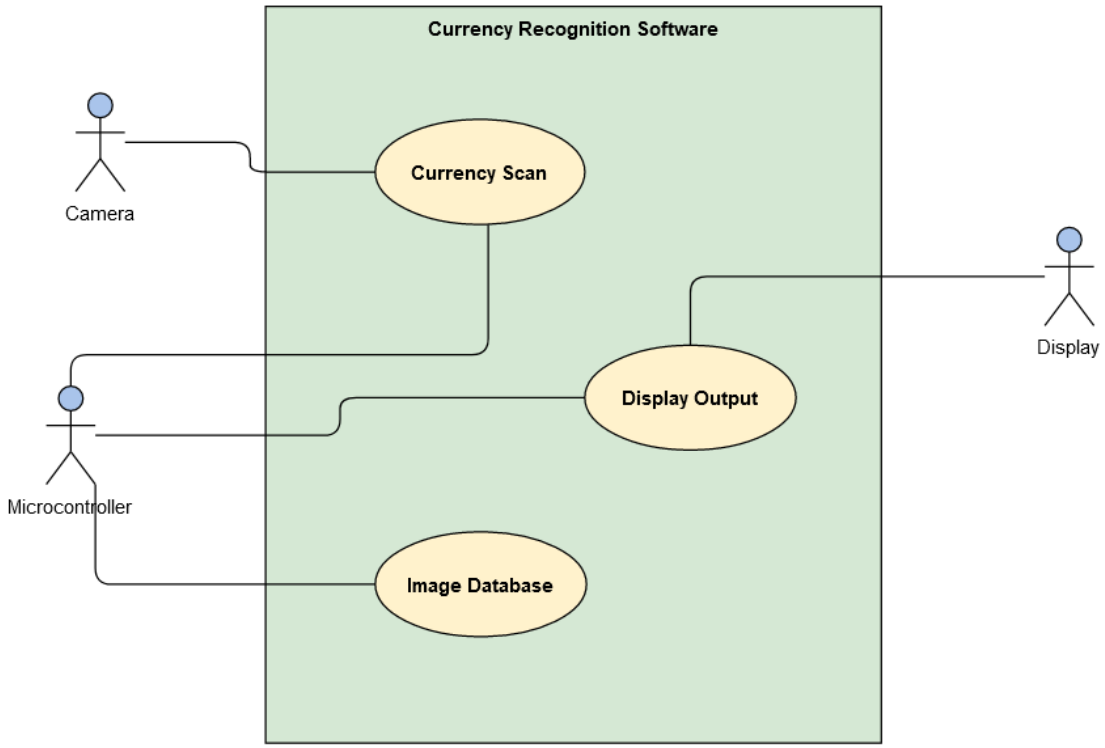

Figure 4: Smart Register Use Case Diagram

Rationale:

With this project, we wanted to persevere and put ourselves into a different perspective that is not talked about. Therefore, we wanted to design the smart register from a disabled person's point of view which the entire team will take into account. Furthermore, this was very passionate for one of the team members because his uncle was disabled which made him passionate about this project. He also explained to us that his uncle was a worker giving the team more perspectives and aspects to build upon when thinking about the smart register. Another team member also explained that they worked with something similar to the Smart Register when they worked as a cashier. Except it didn't use a scanner that we will implement to recognize the given currency. His insight will give us the cashier's point of view needed when creating a register and allow us to optimize the best solution.

Given this information, we all decided that the smart register was the best option because it is backed up by semi experience, supported by the drive, and solves a problem that is prevalent in our society. The way we are planning out our time is shown in Figure 4 and this is a crucial part of the entire process because we want to make sure this machine gets into practical use.

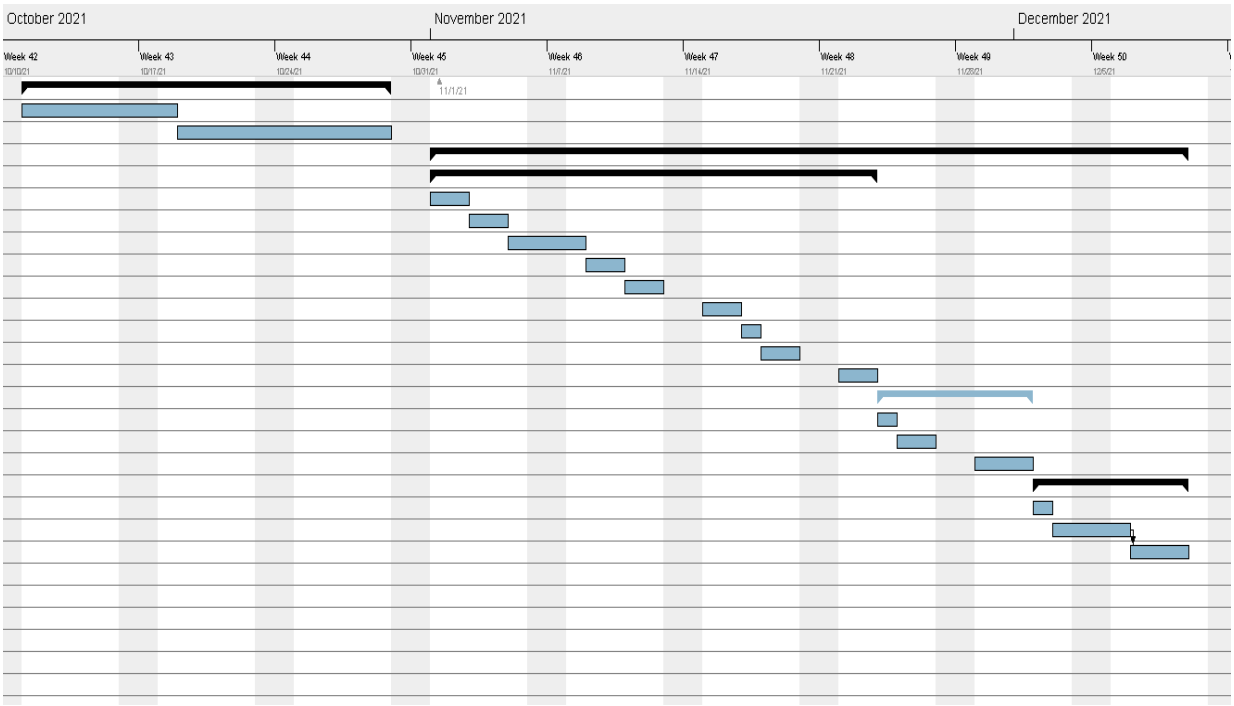

Figure 4: The timeline of the smart register

Design:

To design the smart register, we have to obtain the proper components and work accordingly. Our main objective for this project is to make sure there are no errors and it works swiftly for a regular person and someone who is disabled. Furthermore, there are certain parts that we need which are shown in Figure 5. The main component for this project is going to be the microcontroller which is going to serve as the brain for the smart register, it will be inputting and outputting from the camera and displaying the information on the LCD screens. The cables and PCB are going to be for the hardware side of this project and any type of internal connection while the software team is developing a currency recognition algorithm through the use of machine learning and computer vision.

We want to make sure the register comes out flawlessly and works efficiently for both parties and test out the machine and try to make it as efficient as possible. Furthermore, our goal for this project is to make a product that is practical and can be used to aid disabled workers. We are aiming for the design aspect to be sleek and try to minimize space as much as we can.

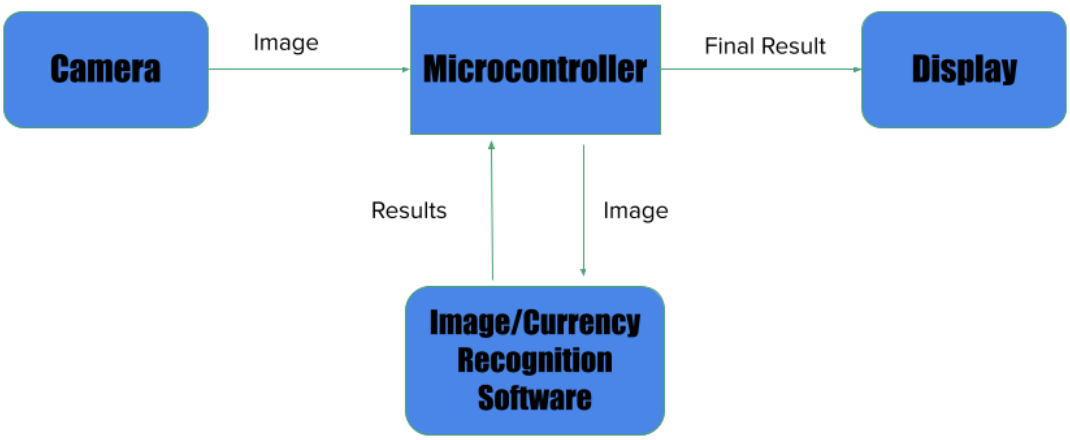

Figure 5: This is the concept for the Smart Register and how this system will work.

Cost Analysis:

For our entire project, we had to budget accordingly and we wanted to use the best parts in order to provide quality for this project. Our goal was to make it practical and for this item to be used, therefore we budgeted accordingly and we left some extra funds in case we need any extra parts. Figure 6 portrays an accurate representation of how the product will work and how each component will be used.

Product	Purpose	Price
Arduino Microcontroller	This specific model will act as our computer inside the smart cash register. This is the most important part of the entire project and we have to make sure the system does not overheat while also making sure the circuit board is protected.	$105
ELEGOO MEGA R3 Board ATmega 2560	This is another micro-controller that is going to be used to pop out the cash tray for the smart register. And also be connected to the Arduino to work accordingly.	$63
Camera Module	The module that will be used for the smart register is going to be a high-quality functioning camera that will be able to show the money clearly.	$25
PCBs	In the smart register, the PCB will be attached to the board and provide a sensor that will detect the money and amount accordingly.	$200
Cash Register Housing & Tray	This will protect the smart cash register and the components inside as well as provide money storage	$175

Touchscreen IPS LCD Screen	The touchpad LCD screen is going to provide the user with an easy-to-use user interface and will be a touchscreen to provide a modern feel. Furthermore, this is crucial to the project seeing as this is the only part of the project where the user is inputting his/her information.	$100
Cables/Wires	The Cables/wires for this project are going to be used on the board to connect the microcontroller accordingly.	$50

Figure 6: Cost Estimation and purpose for each component.

Total Cost of Materials	**(Estimated Price of all components)**	**$718.00**

Discussion:

As far as our budget estimation goes we made a list of all the parts that we need to assemble the register. This includes all the hardware components in a variety of things. We picked the Arduino microcontroller board because of its adaptive functionality towards our goal and our familiarization with it. The Camera module is a basic camera model that will allow the user to show the money clearly. The monitor is going to be touchscreen for a better user experience as well as help the user navigate through the system. Overall all the parts combined come down to **$718** leaving us a big chunk of money remaining for any types of adjustments or errors that we may encounter down the road. We compared the parts by their functionality and princes and we chose the one that best fits our project keeping into consideration our goal and the restraints of our budget.

References:

[1] Adolfsson, Päivi, Lindstedt, Helena, and Janeslätt, Gunnel. *'How People with Cognitive Disabilities Experience Electronic Planning Devices'*. 1 Jan. 2015 : 379 – 392.

[2] Gunnel Janeslätt, Helena Lindstedt & Päivi Adolfsson (2015) Daily time management and influence of environmental factors on use of electronic planning devices in adults with mental disability, Disability and Rehabilitation: Assistive Technology, 10:5, 371-377, DOI: 10.3109/17483107.2014.917124

[3] [Online]. Available: https://people.duke.edu/~ng46/collections/steg-currency-detection.htm

[4] [Online]. Available: https://www.sciencedirect.com/science/article/pii/S1877050915029580

[5] Chumuang Narumol, Ketcham Mahasak (2017) "Thai Banknotes Recognition System by Using Key Points Feature